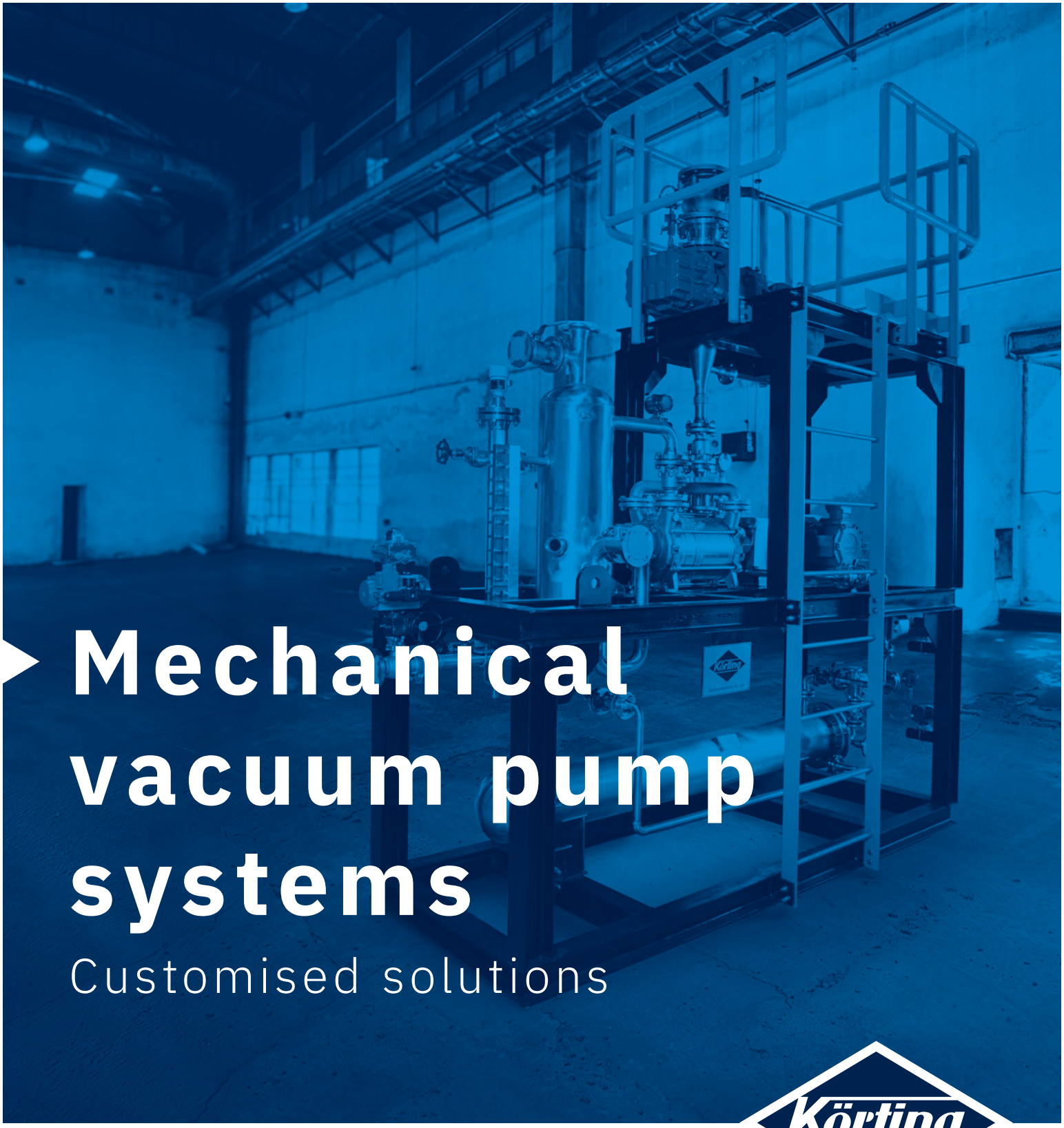

Mechanical vacuum pump systems

Customised solutions

Körting

THE EJECTOR COMPANY

Everything from one source

In premium quality

Reliable pumps, now integrated into our vacuum systems.

DECADES OF EXPERTISE IN MECHANICALLY GENERATED VACUUMS.

Körting has been supplying high-performance mechanical vacuum pumps behind the scenes for years. Now we're staking our name and reputation on them.

These aren't new pumps. These systems have a good track record in chemical processes, refineries, the food and pharmaceuticals industries and many other applications. What's changed?

We're now proudly calling them Körting pumps, which are underpinned by our over 150-year expertise in vacuum engineering.

- Roots blowers, liquid-ring and screw vacuum pumps
- Comply with all required standards and available with ATEX certification
- With worldwide support provided by international Körting subsidiaries
- Integrated with ejectors, condensers and turn-key vacuum systems

A fully mechanical Körting vacuum pump system including the roots blower and a closed loop liquid ring vacuum pump system.

BENEFITS OF THE KÖRTING SYSTEMS WITH MECHANICAL VACUUM PUMPS

- Customised solutions with all the accessories as turnkey vacuum installations
- Custom designed for each process
- A selection of materials and sealing systems make them ideal for most hazardous processes
- ATEX-compliant variants available for all categories
- Körting is an independent systems supplier so customers can choose between component manufacturers
- Over 150 years of experience with technical vacuums for the processing industry

COORDINATED VACUUM – EJECTORS AND RING PUMP OPERATING HAND IN HAND

Körting Hannover GmbH developed a fully automatic hybrid vacuum system (HVS) as a compact, turnkey solution mounted on a frame for a global chemicals producer. With development, design, scheduling, electrical engineering and production based in Hanover, project completion was fast and goal driven. The task was to maintain a constant vacuum despite fluctuating suction mass flow and to reduce the motive steam at partial load. Körting's three-stage solution combines two steam-jet ejectors with an intercondenser and a liquid ring vacuum pump system including a barrier fluid unit, all connected seamlessly with one another.

The system is all about intelligent control. Consistent measurement of process conditions allows the HVS to switch whole stages on or off: When demand falls below the design point, the ejector stages are deactivated to save steam and cut down on wastewater. In this single-stage mode, the liquid ring vacuum pump precision adjusts the vacuum required and maintains it up to the cavitation limit; in two- or three-stage mode, the system operates based on the ejectors' characteristics. A good user interface makes on-site adjustments easy, while monitoring of critical thresholds and optional remote maintenance prevent incidents, protect the customer's process and extend the machinery's service life. The design, production, assembly, pipework, cabling, pneumatics, insulation, PLC programming and even the final performance testing were all carried out at Körting, resulting in a compact, coordinated system that's reliable and delivers the planned savings. A full solution from one source with the focus on consistent performance and low operating costs.

BENEFITS OF THE KÖRTING SYSTEMS WITH LIQUID-RING VACUUM PUMPS

- Tailor-made vacuum systems with mechanical booster pumps, jet ejectors and condensers
- Custom designed for each process
- A range of suitable media make them ideal for lots of processes
- Ability to withstand most liquids, vapours, and small particles
- ATEX-compliant design up to zone 0
- Körting is an independent systems supplier so customers can choose between component manufacturers
- Over 150 years of experience with technical vacuums for the processing industry

Energy-efficient turnkey vacuum system

RELIABLE, SCALABLE, DRY-RUNNING: MECHANICAL BOOSTERS

Mechanical booster pumps are dry-running vacuum pumps. Multi-stage systems can generate exceptional vacuums of up to 10^{-3} mbar abs. ($1{,}45\times10^{-5}$ psi abs.). Combining pumps can achieve volume flow rates of more than 100,000 m³/h (58,860 CFM). Therefore, mechanical booster pumps are very efficient alternatives to standard steam-jet systems.

Variable speed drives control suction pressure precisely. Multiple shaft seals also make them ideal for use with very toxic vapours.

Mechanical booster pumps can also be combined with other dry-running pumps, such as dry-running screw pumps to form one fully dry-running system, or be combined with liquid-ring pumps to convey vapours in the process.

SUSTAINABILITY ACTIVELY PRACTISED

To us, sustainability is no short-lived fad, but an integral part of our 150-year history. It all started with our desire to make durable equipment and systems to our consistent energy-efficiency goals all the way to decades-long relationships with customers.

CUSTOMISED DESIGN

We offer standard variants and ones tuned to your specifications and processes. As an independent systems supplier, Körting can choose from a range of components made by diverse manufacturers. We'd be delighted to discuss options with you in more detail.

A mechanical booster integrated into a Körting vacuum system.

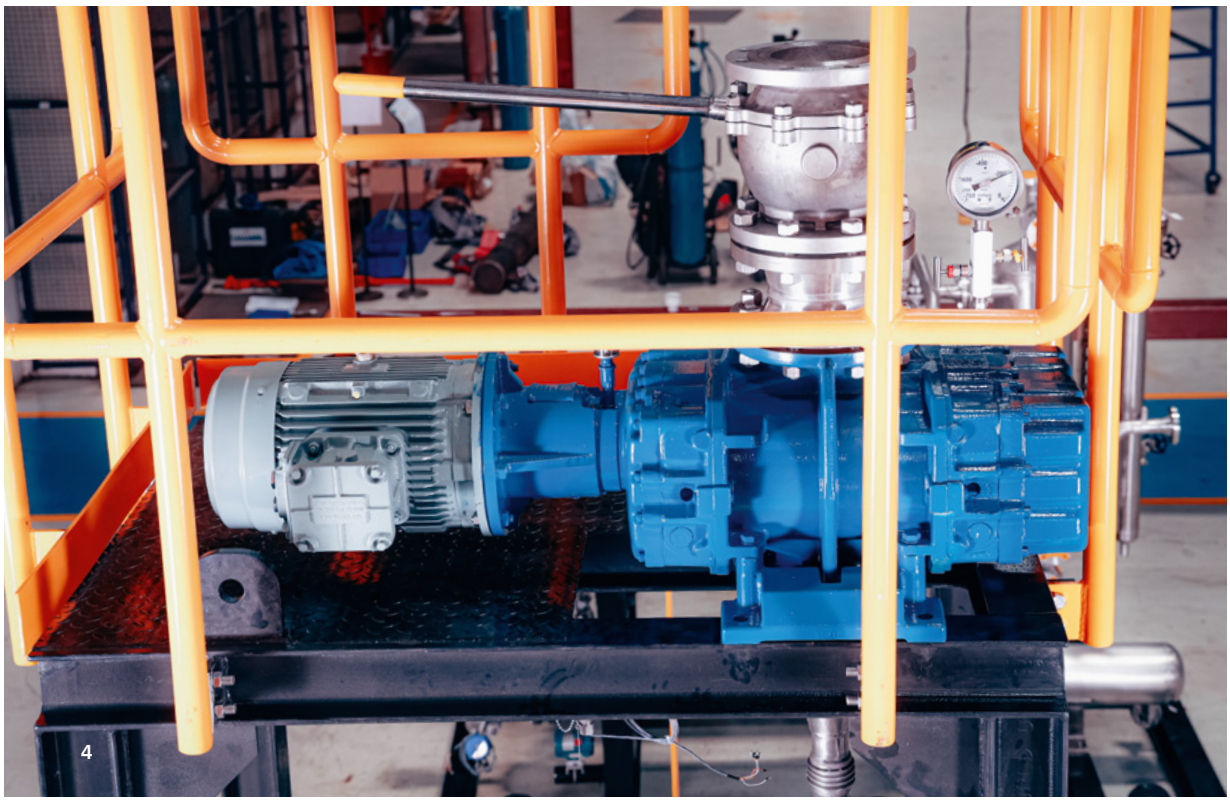

The heart of mechanical vacuum generation.

PRE-SEPARATION ENSURES RELIABLE, EFFICIENT AND LASTING PERFORMANCE

Reliable processes before the pump stage – Pre-separation in vacuum systems

In many applications, cleaning in process is advisable and a necessity to prevent deposits, resins or blockages from occurring. Our portfolio also offers these types of systems, which we can customise to your application. However, in many instances, cleaning alone isn't sufficient to fully protect sensitive vacuum components. This is particularly the case if the gas flow contains contaminants such as solid matter, sticky aerosols or media that undergo physical or chemical changes in a vacuum. In these circumstances, pre-separation is a vital additional preventative measure to ensure the vacuum system runs perfectly.

Why pre-separate?

Downstream mechanical vacuum systems are frequently based on compressor systems under enormous mechanical stress with tight gap dimensions and high volume flow rates. These systems are powerful, but also sensitive to particulate, viscous, or reactive substances that are entrained in the process. If these types of media are not filtered out and enter the vacuum system, they can frequently cause blockages, deposits, or even mechanical damage. Viscosity can also increase, or substances harden when pressure or temperatures change. Crystallisation or polymerisation can occur and pump components corrode or be exposed to chemicals. Maintenance is more frequently required and downtime occurs. A customised pre-separator protects the vacuum system and ensures stable, flawless operations – even if the media are challenging.

Real-world examples

Glycol scrubbers don't just remove condensable vapours, but also finely dispersed droplets and sticky aerosols before they precipitate. Ice condensers and cold-water surface condensers reliably condense solvents, crystallising substances and high-boiling organic vapour. They are ideal for chemical and pharmaceutical processes. Hot or cold separating systems control whether and where media containing wax or resin suddenly harden or become very viscous when the temperature drops.

The inside of a vacuum scrubber without fittings

Product benefits

EVERYTHING FROM ONE SOURCE

You really stand to gain when pre-separation is part of a whole vacuum system and not achieved via a separate piece of equipment. And that's exactly what we offer, complete, engineered solutions from one source.

Pre-separation of solids, viscous media, or complex gas mixtures means you boost efficiency, cut maintenance costs, and protect your investment in the long term.

- In mechanical, thermal or control terms – all components work hand in hand
- We conduct evaluations and calculations, re-engineer existing systems
- We harness our process-engineering expertise to optimise your processes
- You have one point of contact for concept development, construction, commissioning and service
- We offer modular and scaleable solutions – from lab installations to large production lines

Here you can find our practical questionnaire for a quick quotation enquiry and further information about our mechanical vacuum pump systems.

P&ID of a scrubber system for pre-separation in the chemical industry

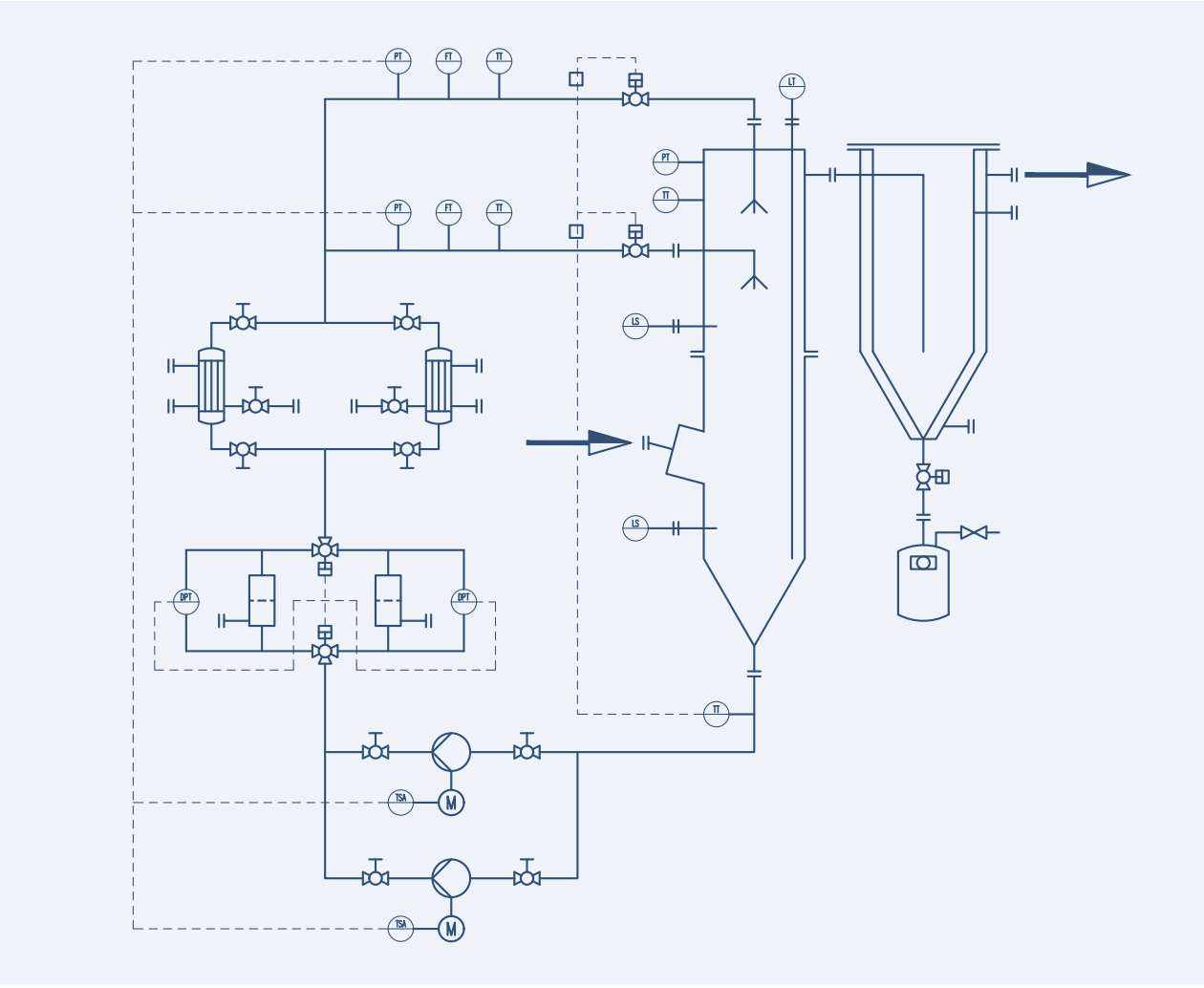

A one-stop solution.

STEAM, HYBRID AND MECHANICAL SYSTEMS: A COMPARISON OF KEY DIFFERENCES.

	A steam ejector system	A hybrid system with an LRVP end stage	A mechanical vacuum system
Controllability	● ● ●	● ● ●	● ● ●
Steam consumption	● ● ●	● ● ●	● ● ●
Fresh/waste water	● ● ●	● ● ●	● ● ●
Investment costs	● ● ●	● ● ●	● ● ●
Vulnerability to impurities	● ● ●	● ● ●	● ● ●
Maintenance	● ● ●	● ● ●	● ● ●
Space requirements	● ● ●	● ● ●	● ● ●

Körting Hannover GmbH
Badenstedter Straße 56
30453 Hannover

+49 511 2129 - 301
sales@koerting.de

KOERTING.DE

178-MVPS-EN-251114